PR No. 1000007467 SRM/RFx 6100000109
DSB (Double Sided PCB) Fabrication Process Flow

Highlighted processes will be handled separately

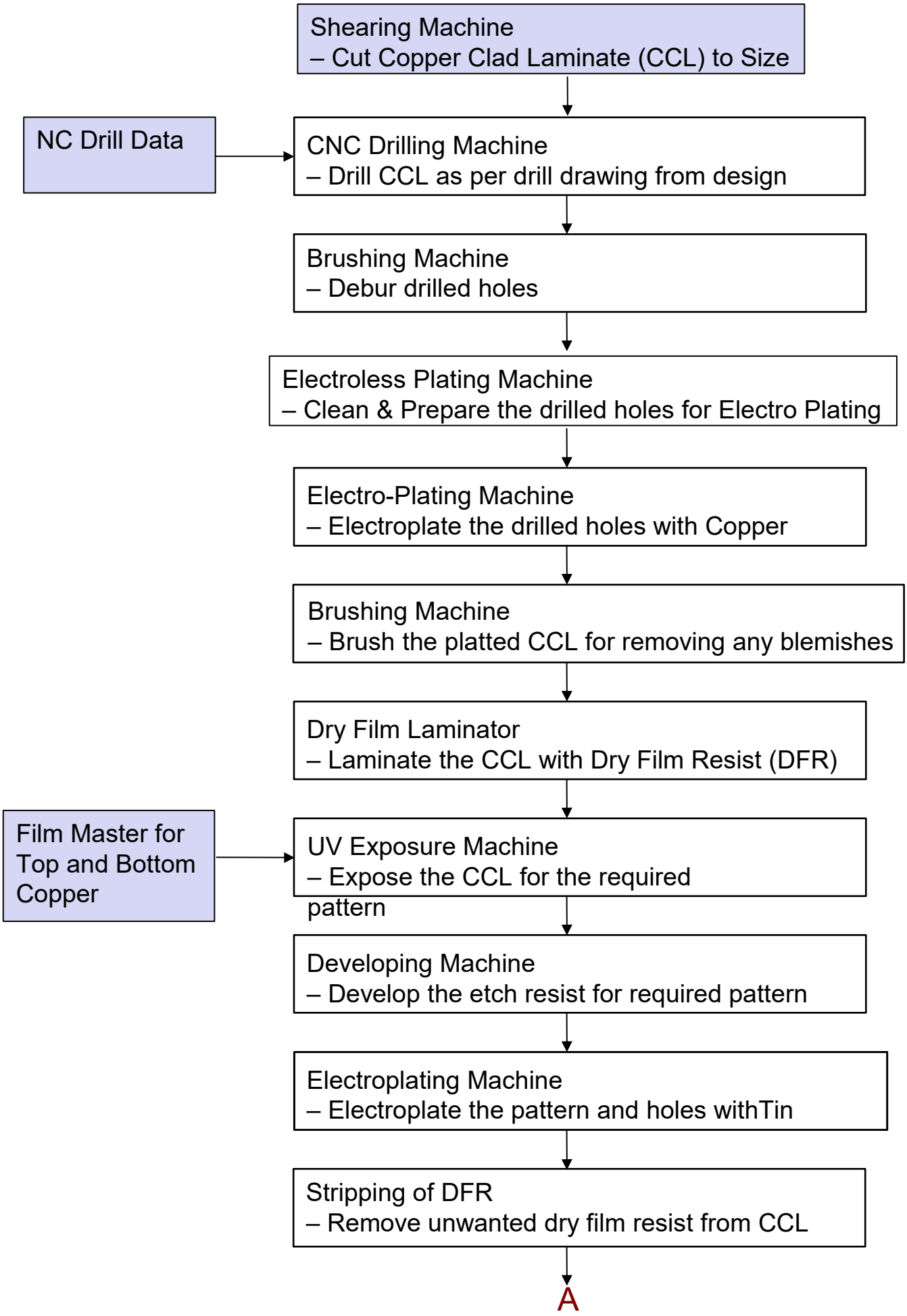

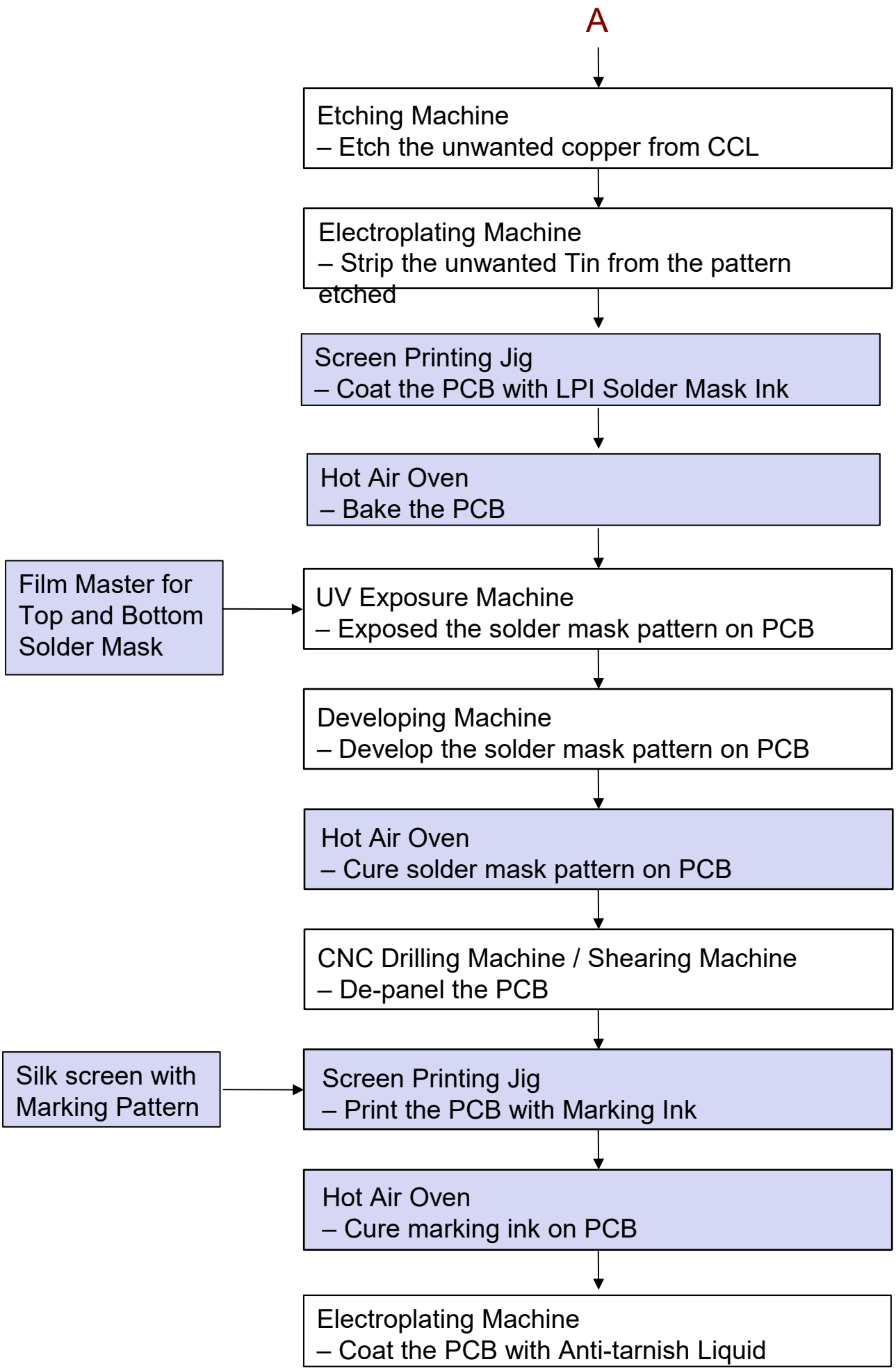
A
Etching Machine
– Etch the unwanted copper from CCL
Electroplating Machine
– Strip the unwanted Tin from the pattern etched
Screen Printing Jig
– Coat the PCB with LPI Solder Mask Ink
Hot Air Oven
– Bake the PCB
Film Master for Top and Bottom Solder Mask
UV Exposure Machine
– Exposed the solder mask pattern on PCB
Developing Machine
– Develop the solder mask pattern on PCB
Hot Air Oven
– Cure solder mask pattern on PCB
CNC Drilling Machine / Shearing Machine
– De-panel the PCB
Silk screen with Marking Pattern
Screen Printing Jig
– Print the PCB with Marking Ink
Hot Air Oven
– Cure marking ink on PCB
Electroplating Machine
– Coat the PCB with Anti-tarnish Liquid